RL-P240AJ Programmable Heavy Duty Shaft Encoder

DESCRIPTION

The RL-P encoder converts shaft rotation into square wave output pulses to provide an accurate and reliable means of digitizing position, rate, or length of travel. The number of counts per each revolution of the shaft and the output circuit type are selectable by setting configuration switches. The RL-P is intended to be shaft coupled using a flexible shaft coupling or other means to resolve shaft to shaft misalignment, or using a timing belt and sprocket.

FEATURES

- **Programmable Counts/Revolution and Output Circuit**
- **ESD / Short Circuit / Reverse Voltage Protected**
- **Exclusive "Anti-Jitter" Circuit for Conveyor Applications**

* CE marking requires Photocraft cable, and surge protection option if cable exceeds 100' (30m) or leaves the building.

DIMENSIONS

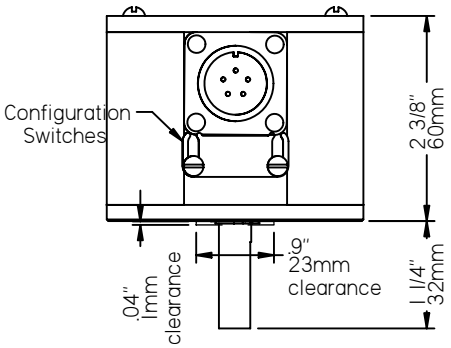

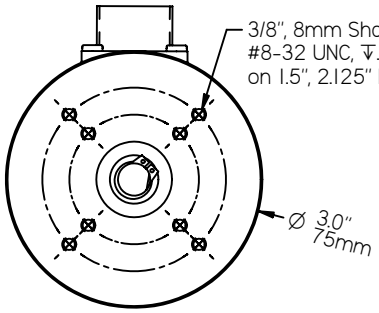

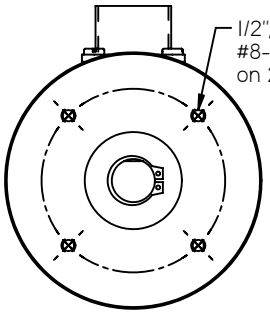

TRI-TRONICS®

MATERIAL HANDLING AND INDUSTRIAL EXPERIENCE SINCE 1974

PHOTOCRAFT Encoders

PO Box 25135 813-886-4000
Tampa FL 33622-5135, USA 800-237-0946
ttco.com • photocraftencoders.com

SPECIFICATIONS

Mechanical

Weight: 16.8 oz (475 gm) without cable

Shaft Loading:

Shaft Diameter	Radial Lbs (kg)	Axial Lbs (kg)	Factor (BL)
3/8" / 8mm	40 (18.1)	30 (13.6)	32
1/2" / 10mm	45 (20.4)	35 (15.9)	37
5/8"	50 (22.7)	40 (18.1)	41

Bearing Life: BL x 1,000,000/rpm = hours

Materials:
- Case: ¼" Aluminum, anodized
- Shaft: 303 Stainless steel
- Switch cover: ABS plastic

Electrical Connections

Pin No.	Function	Wire Color
A	+vdc	Red
B	Common	Black
C	Output	White
D	no connection	—
E	no connection	—

Configuration Switches

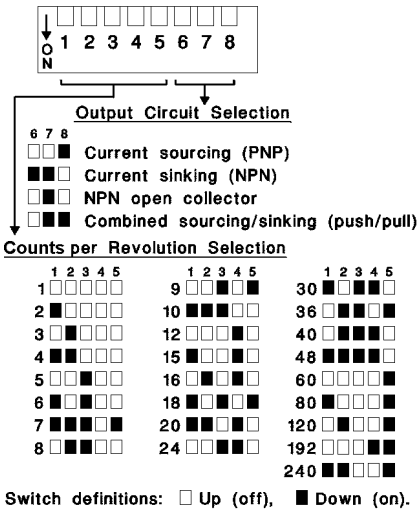

Electrical

Supply Voltages (Vin): (specify when ordering)
- — 5 ± 5% vdc
- — 8 to 30 vdc

Supply Current: 50 ma max (no load)

Output Current (Io): 50ma max source/sink

Output Circuit: Selectable by setting switches 6 to 8 (see configuration switches)
- — Current sinking NPN transistor with 3.3K pull-up resistor
- — Current sourcing PNP transistor with 3.3K pull-down resistor
- — NPN open collector (30vdc max)
- — Push/Pull (combined sourcing/sinking)

Output Protection:
- — Short Circuit
- — ESD to 8KV direct and 25KV air

Operating Temperature: -25° to +85° C

Maximum Operating Speed: 3,000 rpm

Outputs

Counts per Revolution: Selectable by setting switches 1 to 5 (see configuration switches)

Output Waveform: 50/50 squarewave
- — **Pulse On-Off Ratio:** 50%±10%
- — **Pulse Interval Jitter:** ±10%
- — **Pulse rise time:** 2 µsec (max)
- — **Pulse fall time:** 5 µsec (max)
- — **Voltage (high):** Vin-2.5 vdc (min)
- — **Voltage (low):** 1.5 vdc (max)

(600 rpm, Vin=24vdc, 10ma<Io<50ma, 25°C)

Anti-jitter: Increases the pulse hysteresis to ½ of a pulse width, eliminating the effects of mechanical vibration and the possible dither that results in false output pulses. For example a 10 pulse per revolution output would have 18° hysteresis (i.e. 360° ÷ 10 × ½).

MODEL NUMBER

RL		—	P240AJ	/			
Model Number	**Shaft Diameter:** blank for 3/8", **.5**=1/2", **.625**=5/8", **M8**=8mm, **M10**=10mm, **D**=3/8" double ended		**Program Name** Call or see our website for information about other available programs for this encoder model.		**Supply Voltage:** **5**=5vdc, **8-30**=8-30vdc	**Modification Number:** optional modification or special feature ID. Call or see our website.	**Accessories:** leave blank for no accessories. Call or see our website for more information.

Example: **RL.5-P240AJ/8-30** - .5" shaft, P240AJ program, 8-30vdc

1606